Automatic Ice Dispenser

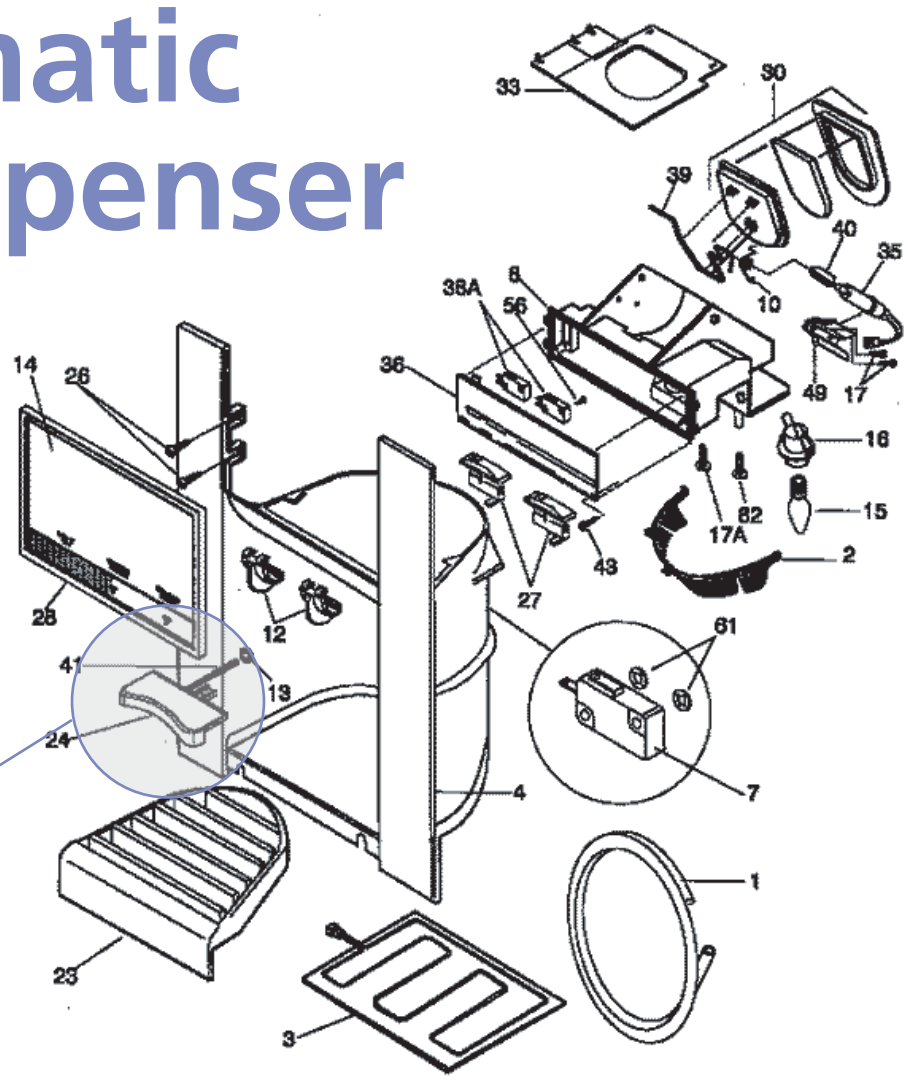

Pressure sensitive widget

Problem

Paper cups are crushed by the force required to activate the sensor.

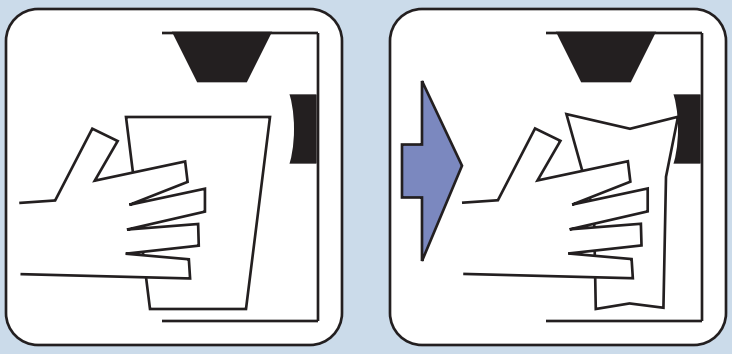

Ice overflows cup if user does not release sensor in time.

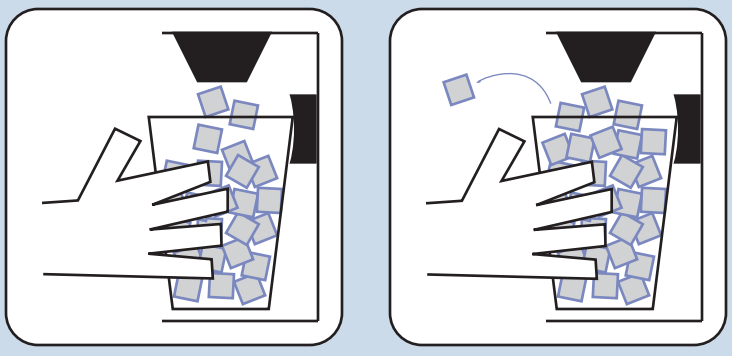

Solution

The pressure-sensitive widget is replaced with a grid of infared sensors:

1. User places cup into dispenser, triggering motion sensors.
2. Ice begins to fill cup.
3. User removes cup when ice reaches desired level, haulting ice flow.
4. OR sensors detect cup is full and hault ice flow.

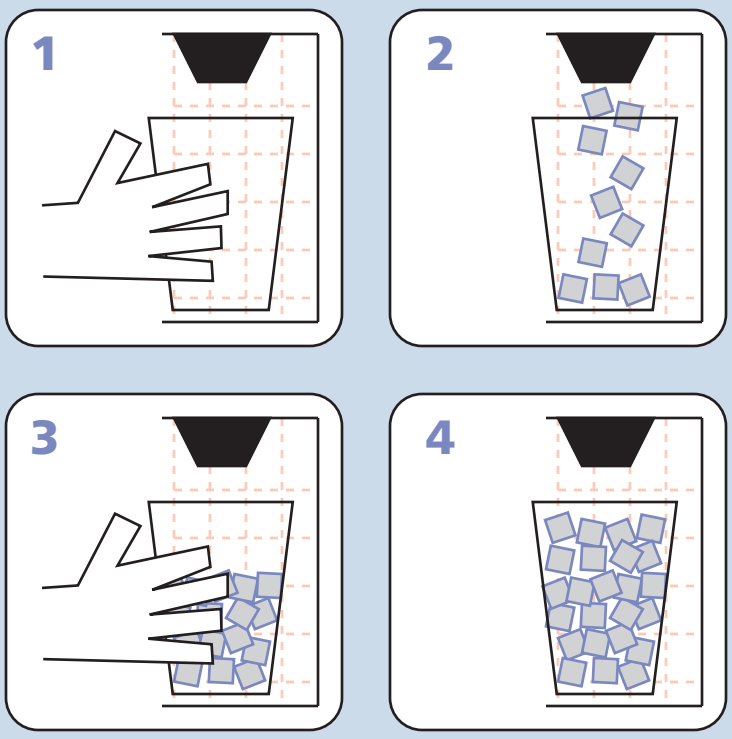

Related Widgets

- Automatic faucets and hand driers
- Gasoline pumps (with auto shut-off)
- Carbonated beverage taps

Ben Glenn
IID Spring 2004
Homework 1:
Interaction Widget